TELEDYNE
COAX SWITCHES
Everywhereyoulook™

Series CCR-40K/CR-40K

Miniature DC–40 GHz
Failsafe SPDT Coaxial Switch

PART NUMBER	DESCRIPTION
CCR-40K	Commercial Failsafe SPDT, DC-40GHz, 2.92mm.
CR-40K	Elite Failsafe SPDT, DC-40GHz, 2.92mm.

The CCR-40K/CR-40K is a broadband, SPDT, electromechanical, coaxial switch designed to switch a microwave signal from a common input to either of two outputs. The characteristic impedance is 50 Ohms. These switches incorporate 2.92mm high performance connectors.
The CCR-40K/CR-40K series switch is offered with a failsafe actuator. The CCR-40K/CR-40K series is compatible with the two most common mounting hole patterns making it interchangeable with a variety of switches.

RoHS Compliant

Available with USB & Ethernet Control!

Click here MMA SERIES

ENVIRONMENTAL AND PHYSICAL CHARACTERISTICS

Operating Temperature Commercial Model, CCR-40K Elite Model, CR-40K	 –40°C to 65°C –55°C to 85°C
Vibration (MIL-STD-202 Method 214, Condition D, non-operating)	10 g's RMS
Shock (MIL-STD-202 Method 213, Condition D, non-operating)	500 g's
Standard Actuator Life Actuator Life w/ Additional Features	5,000,000 cycles 1,000,000 cycles
Connector Type	2.92mm
Humidity (Moisture Seal)	Available
Weight	1.65 oz. (46.78g) (max.)

ELECTRICAL CHARACTERISTICS

Form Factor	SPDT, break before make				
Frequency Range	DC–40 GHz				
Characteristic Impedance	50 Ohms				
Operate Time	10 ms (max.)				
Release Time	10 ms (max.)				
Actuation Voltage Available	12	15	24	28	V
Actuation Current, max. @ ambient temp.	200	250	120	90	mA

TYPICAL PERFORMANCE CHARACTERISTICS

Frequency	DC–6 GHz	6–12 GHz	12–18 GHz	18–27 GHz	27-34 GHz	34-40 GHz
Insertion Loss, dB, typical.	0.2	0.4	0.5	0.6	0.7	0.8
Isolation, dB, typical.	70	60	60	50	50	50
VSWR , typical.	1.25:1	1.40:1	1.50:1	1.60:1	1.80:1	1.80:1

For maximum limits, please see charts on page 3

PART NUMBERING SYSTEM

CCR-40 K 1 C - T **

Series — CCR-40
Connectors — K
Actuator Voltage — 1
Actuator Type — C
Options — T

Connector
K: 2.92mm Female

Actuator Voltage
1: 28 Vdc Failsafe
2: 15 Vdc Failsafe
3: 12 Vdc Failsafe
4: 24 Vdc Failsafe

Actuator Type
0: Standard Contacts
C: Indicator Contacts

**SEE PARTS LIST ON PAGE 7

Options
T: TTL Drivers with Diodes
D: Transient Suppression Diodes
N: Narrow Body
M: Moisture Seal
S: 9-Pin D-Sub Connector

For other options, contact factory.

© 2014 TELEDYNE RELAYS

SCHEMATICS AND MECHANICAL OUTLINE

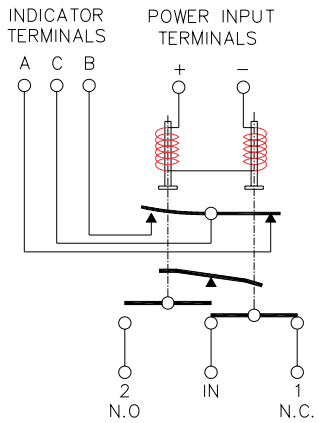

Indicators

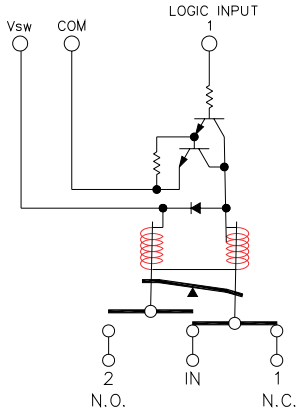

TTL

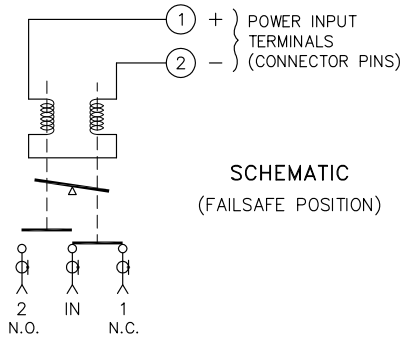

Analog

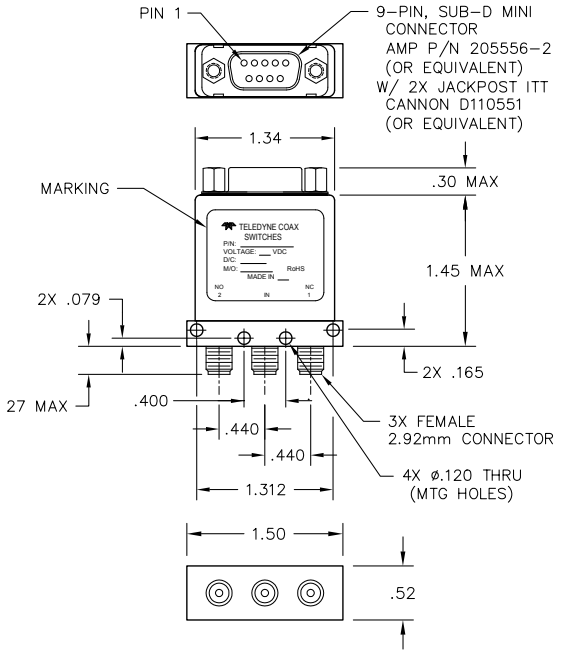

Standard Width Body

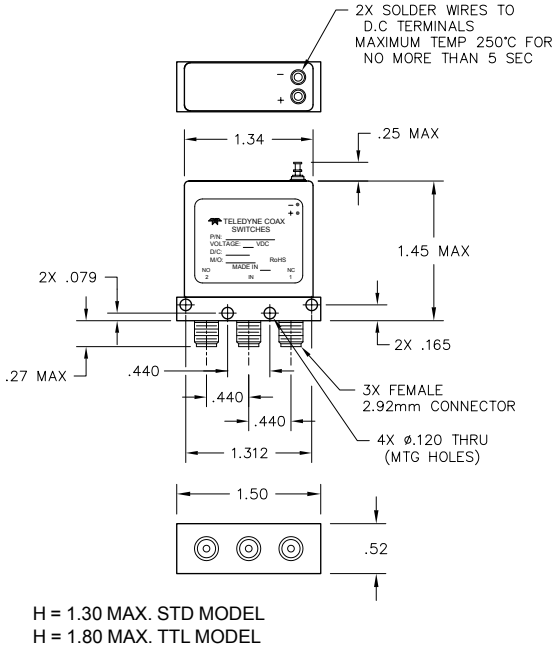

Optional Narrow Width Body

9 PIN D-SUB PINOUT FOR FAILSAFE SPDT

	OPTIONS			
Pin No.	Basic	Indicators	TTL	Indicators & TTL
1	+	+		
2	-	-		
3			Common	Common
4			1	1
5				
6			Vsw	Vsw
7		A		A
8		B		B
9		C		C

TRUTH TABLE (with TTL option)

Logic Input	RF Path		Indicator (if applicable)	
1	IN to 1	IN to 2	A	B
0	On	Off	C	0
1	Off	On	0	C

SPECIFICATIONS ARE SUBJECT TO CHANGE WITHOUT NOTICE
© 2015 TELEDYNE COAX SWITCHES

TYPICAL NARROWBAND RF INSERTION LOSS PERFORMANCE CURVES

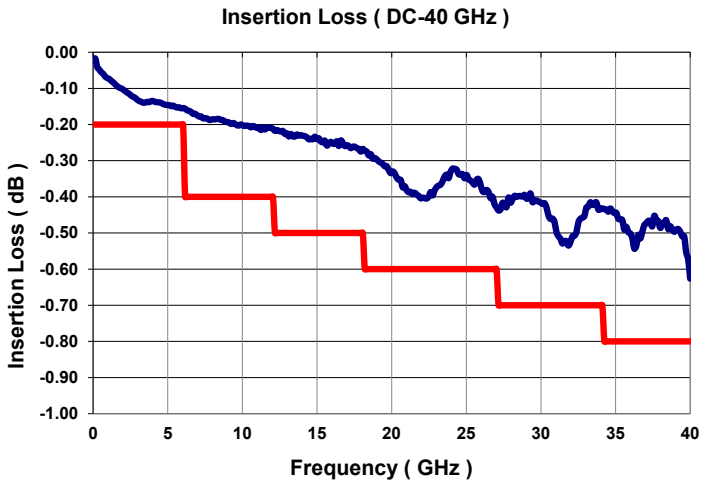

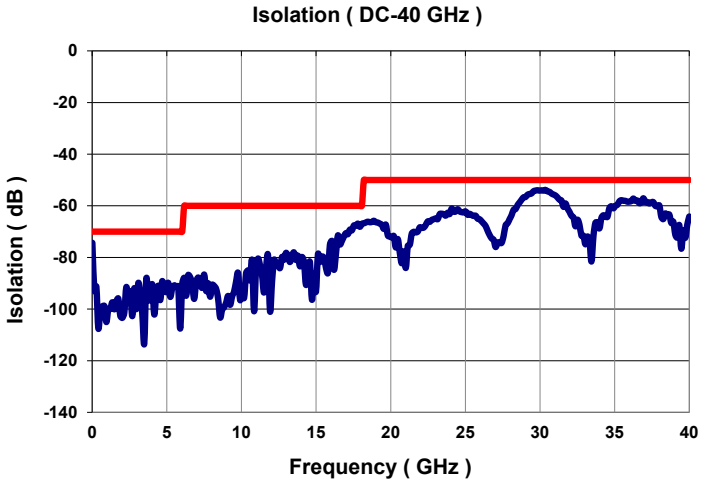

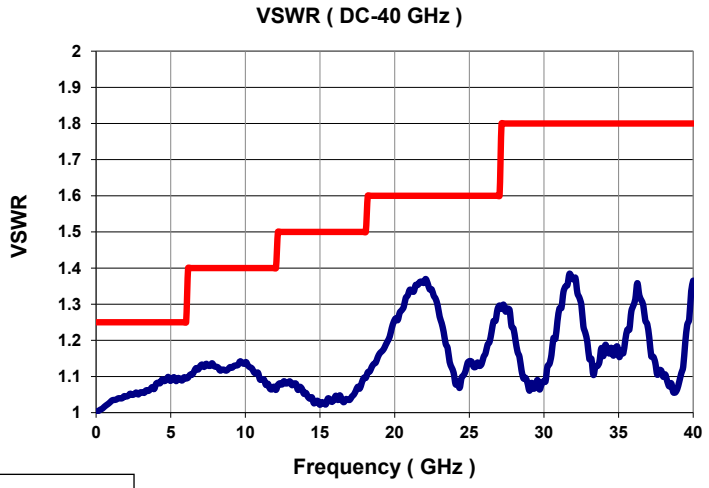

TYPICAL

MAXIMUM TEST LIMIT

GLOSSARY

Actuator
An actuator is the electromechanical mechanism that transfers the RF contacts from one position to another upon DC command.

Arc Suppression Diode
A diode is connected in parallel with the coil. This diode limits the “reverse EMF spike” generated when the coil de-energizes to 0.7 volts. The diode cathode is connected to the positive side of the coil and the anode is connected to the negative side.

Date Code
All switches are marked with either a unique serial number or a date code. Date codes are in accordance with MIL-STD-1285 Paragraph 5.2.5 and consist of four digits. The first two digits define the year and the last two digits define the week of the year (YYWW). Thus, 1032 identifies switches that passed through final inspection during the 32nd week of 2010.

Failsafe
A failsafe switch reverts to the default or failsafe position when actuating voltage is removed. This is realized by a return spring within the drive mechanism. This type of switch requires the continuous application of operating voltage to select and hold any position. (Multi-position switches are normally open with no voltage applied).

Indicator
Indicators tell the system which position the switch is in. Other names for indicators are telemetry contacts or tellback circuit. Indicators are usually a set of internally mounted DC contacts linked to the actuator. They can be wired to digital input lines, status lights, or interlocks. Unless otherwise specified, the maximum indicator contact rating is 30 Vdc, 50 mA, or 1.5 Watts into a resistive load.

Isolation
Isolation is the measure of the power level at the output connector of an unconnected RF channel as referenced to the power at the input connector. It is specified in dB below the input power level.

SPDT Switch
A single-pole double-throw, bi-directional switch that can be used as having one input and two outputs or two inputs and one output.

Switching Time
Switching time is the total interval beginning with the arrival of the leading edge of the command pulse at the switch DC input and ending with the completion of the switch transfer, including contact bounce. It consists of three parts: (1) inductive delay in the coil, (2) transfer time of the physical movement of the contacts, and (3) the bounce time of the RF contacts.

TTL Switch Driver Option
As a special option, switch drivers can be provided for both failsafe and latching switches, which are compatible with industry-standard low-power Schottky TTL circuits.

Performance Parameters vs Frequency
Generally speaking, the RF performance of coaxial switches is frequency dependent. With increasing frequency, VSWR and insertion loss increase while isolation decreases. All data sheets specify these three parameters as “worst case” at the highest operating frequency. If the switch is to be used over a narrow frequency band, better performance can be achieved.

Actuator Current vs Temperature
The resistance of the actuator coil varies as a function of temperature. There is an inverse relationship between the operating temperature of the switch and the actuator drive current. For switches operating at 28 VDC, the approximate actuator drive current at temperature, T, can be calculated using the equation:

$$I_T = \frac{I_A}{[1 + .00385\,(T-20)]}$$

Where:

I_T = Actuator current at temperature, T

I_A = Room temperature actuator current – see data sheet

T = Temperature of interest in °C

Magnetic Sensitivity
An electro-mechanical switch can be sensitive to ferrous materials and external magnetic fields. Neighboring ferrous materials should be permitted no closer than 0.5 inches and adjacent external magnetic fields should be limited to a flux density of less than 5 Gauss.

SPECIAL FEATURE

Switching High-Power or Highly Sensitive Signals
Ensure the most linear response with the best galvanically matched contact system in the industry. Extremely low passive intermodulation is standard on all of our switches.

Carrier Frequency 1	Carrier Frequency 2	PIM 3rd Order Frequency	PIM 5th Order Frequency
870 MHz	893 MHz	847 MHz	824 MHz

	3rd Order Intermodulation	5th Order Intermodulation
SPDT	–91 dBm	–110 dBm
	–134 dBc	–153 dBc

SPECIFICATIONS ARE SUBJECT TO CHANGE WITHOUT NOTICE
© 2015 TELEDYNE COAX SWITCHES

FAILSAFE CCR-40K/CR-40K PART NUMBER LIST

	Part No.		Part No.		Part No.
1	CCR-40KXC	**43**	CCR-40KX0-TMS	**85**	CR-40KX0-NM
2	CCR-40KXC-D	**44**	CCR-40KX0-TN	**86**	CR-40KX0-NMS
3	CCR-40KXC-DM	**45**	CCR-40KX0-TNM	**87**	CR-40KX0-NS
4	CCR-40KXC-DMS	**46**	CCR-40KX0-TNMS	**88**	CR-40KX0-S
5	CCR-40KXC-DN	**47**	CCR-40KX0-TNS	**89**	CR-40KX0-T
6	CCR-40KXC-DNM	**48**	CCR-40KX0-TS	**90**	CR-40KX0-TM
7	CCR-40KXC-DNMS	**49**	CR-40KXC	**91**	CR-40KX0-TMS
8	CCR-40KXC-DNS	**50**	CR-40KXC-D	**92**	CR-40KX0-TN
9	CCR-40KXC-DS	**51**	CR-40KXC-DM	**93**	CR-40KX0-TNM
10	CCR-40KXC-M	**52**	CR-40KXC-DMS	**94**	CR-40KX0-TNMS
11	CCR-40KXC-MS	**53**	CR-40KXC-DN	**95**	CR-40KX0-TNS
12	CCR-40KXC-N	**54**	CR-40KXC-DNM	**96**	CR-40KX0-TS
13	CCR-40KXC-NM	**55**	CR-40KXC-DNMS		
14	CCR-40KXC-NMS	**56**	CR-40KXC-DNS		
15	CCR-40KXC-NS	**57**	CR-40KXC-DS		
16	CCR-40KXC-S	**58**	CR-40KXC-M		
17	CCR-40KXC-T	**59**	CR-40KXC-MS		
18	CCR-40KXC-TM	**60**	CR-40KXC-N		
19	CCR-40KXC-TMS	**61**	CR-40KXC-NM		
20	CCR-40KXC-TN	**62**	CR-40KXC-NMS		
21	CCR-40KXC-TNM	**63**	CR-40KXC-NS		
22	CCR-40KXC-TNMS	**64**	CR-40KXC-S		
23	CCR-40KXC-TNS	**65**	CR-40KXC-T		
24	CCR-40KXC-TS	**66**	CR-40KXC-TM		
25	CCR-40KX0	**67**	CR-40KXC-TMS		
26	CCR-40KX0-D	**68**	CR-40KXC-TN		
27	CCR-40KX0-DM	**69**	CR-40KXC-TNM		
28	CCR-40KX0-DMS	**70**	CR-40KXC-TNMS		
29	CCR-40KX0-DN	**71**	CR-40KXC-TNS		
30	CCR-40KX0-DNM	**72**	CR-40KXC-TS		
31	CCR-40KX0-DNMS	**73**	CR-40KX0		
32	CCR-40KX0-DNS	**74**	CR-40KX0-D		
33	CCR-40KX0-DS	**75**	CR-40KX0-DM		
34	CCR-40KX0-M	**76**	CR-40KX0-DMS		
35	CCR-40KX0-MS	**77**	CR-40KX0-DN		
36	CCR-40KX0-N	**78**	CR-40KX0-DNM		
37	CCR-40KX0-NM	**79**	CR-40KX0-DNMS		
38	CCR-40KX0-NMS	**80**	CR-40KX0-DNS		
39	CCR-40KX0-NS	**81**	CR-40KX0-DS		
40	CCR-40KX0-S	**82**	CR-40KX0-M		
41	CCR-40KX0-T	**83**	CR-40KX0-MS		
42	CCR-40KX0-TM	**84**	CR-40KX0-N		

* X = 1 (28Vdc), 2 (15Vdc), 3 (12Vdc) and 4 (24Vdc)